DNS CONTROLS SDN BHD
(Company No.: 877425-P)
No. 42-2, Jalan Kuchai Maju 11, Kuchai Entrepreneur Park, Jalan Kuchai Lama, 58200 Kuala Lumpur, Malaysia.
T +603 7983 9016 / F +603 7980 0394 / www.dnscontrols.my

RTD Probes with Connection Head

A1RTD1-CXX -01

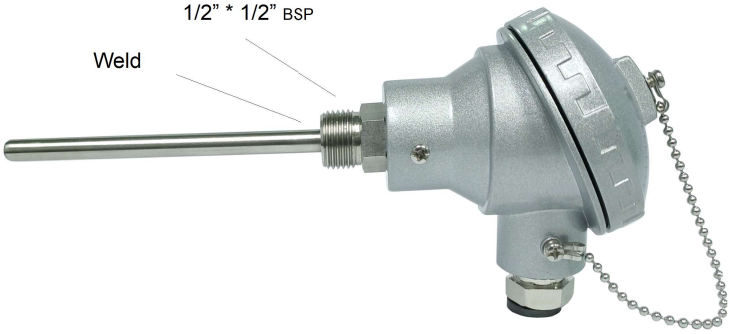

A1RTD1-CXX -02

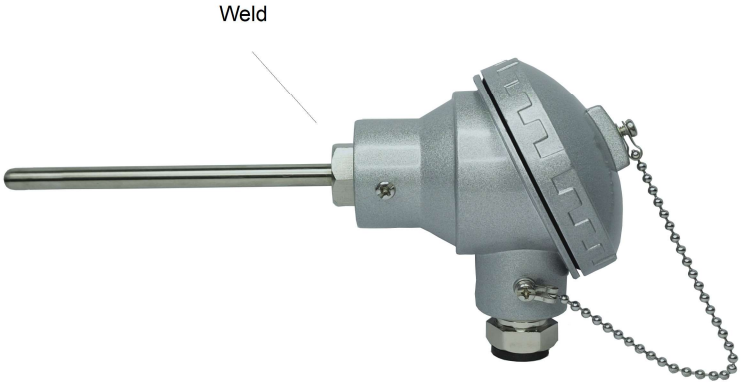

Overview

- All temperature sensors are custom made standard item
  - 100 ohm platinum RTD 3-wire element
  - Class A accuracy
  - Ø6.35mm diameter, 316 SS sheath to protect against harsh environments
  - RTD element encased in Magnesium Oxide (MgO) powder insulation provides excellent vibration dampening and heat transfer
  - 150mm , 300mm or 450mm probe length
- Connection Head
  - Cast aluminum IP67 screw cover head with gasket
  - One turn cover removal & installation eliminates cross threading and saves time
  - ½"BSP conduit opening with internal stop to prevent overtightening and installation damage
  - Gripping ribs on cover edge
  - with cover chain
- Wiring
  - Ceramic terminal block
  - Brass terminals with screws eliminate the need to wrap connections around screws
- Others
  - Required others type of RTD sensors ,specification & temperature range can be custom made upon request.

RTD Probes with Connections Head

Part Number	RTD Type	Probe Diameter (O.D)	Probe Length	Temperature Sensing Range	Mounting
A1RTD1-C06-01	PT 100 3 wire	6.35mm	150mm	-200 to 300°c	Integral 1/2" x 1/2" BSP 304 SS
A1RTD1-C12-01			300mm		
A1RTD1-C18-01			450mm		
A1RTD1-C06-02			150mm		–
A1RTD1-C12-02			300mm		
A1RTD1-C18-02			450mm		

Technical Specifications

Sensing Element	Single 100 ohm (PT 100) , 3 wire
Initial Accuracy	Class A +/- [0.15 + 0.002 ltl] ° C
Probe	Ø6.35mm ,316 stainless steel sheath,single RTD is embedded in MgO powder
Minimum Installation Depth	76mm length
Connection Head	Die-cast aluminum,screw cover with chain,IP 67, 1/2"BSP conduit opening
Wiring	Ceramic terminals base terminals and screw

DNS CONTROLS SDN BHD
(Company No.: 877425-P)
No. 42-2, Jalan Kuchai Maju 11, Kuchai Entrepreneur Park, Jalan Kuchai Lama, 58200 Kuala Lumpur, Malaysia.
T +603 7983 9016 / F +603 7980 0394 / www.dnscontrols.my

RTD Probes with Connection Head

Dimension

A1RTD1-CXX -01

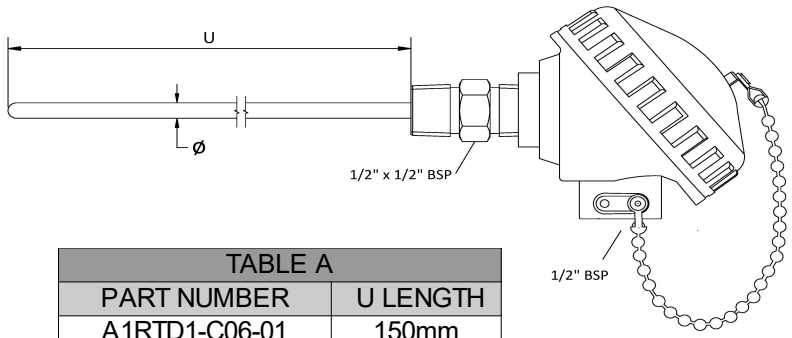

TABLE A	
PART NUMBER	U LENGTH
A1RTD1-C06-01	150mm
A1RTD1-C12-01	300mm
AIRTD1-C18-01	450mm

Wiring Information

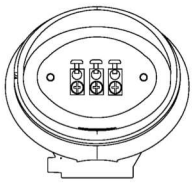

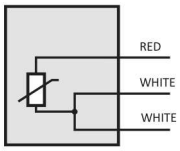

- Ignore polarity marks on terminal base
- Recommended screw terminal tightening torque 3-4 lb-in

A1RTD1-CXX -02

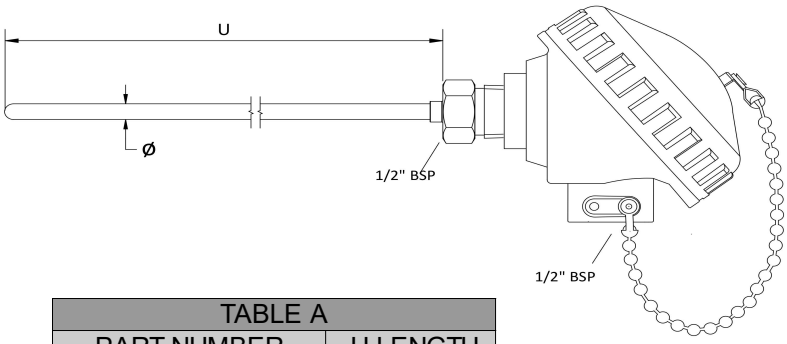

TABLE A	
PART NUMBER	U LENGTH
A1RTD1-C06-02	150mm
A1RTD1-C12-02	300mm
A1RTD1-C18-02	450mm