Bending Beam Load Cell

>Model CB41

Single point load cell
High accuracy and low price.

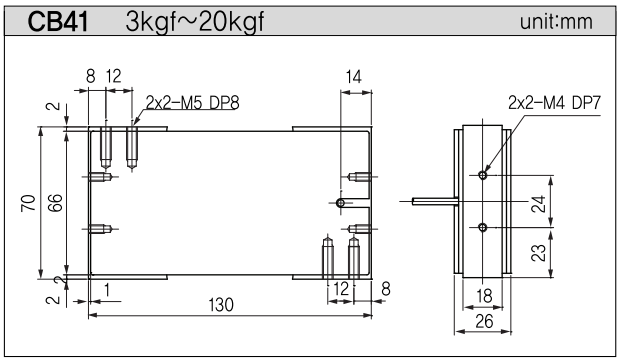

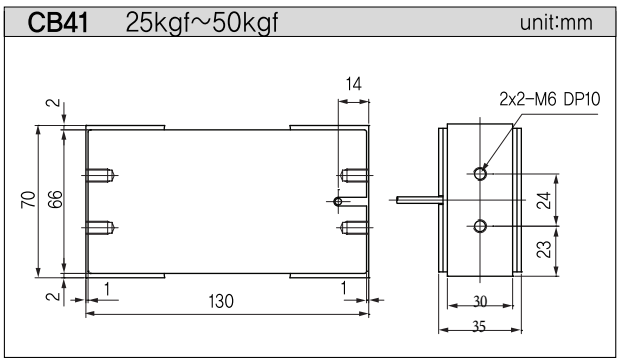

>SPECIFICATIONS

Specifications	Accuracy
Rated capacity(R.C)	3kgf, 10kgf, 20kgf, 25kgf, 50kgf
Rated output(R.O)	2mV/V±10%
Nonlinearity	0.02% of R.O.
Hysteresis	0.02% of R.O.
Repeatability	0.02% of R.O.
Creep(20min)	0.03% of R.O.
Zero balance	±5% of R.O.
Terminal resistance, input	420±20Ω
Terminal resistance, output	350±2Ω
Insulation resistance bridge	2000MΩ
Temperature effect on rated output	0.02% of LOAD/10℃
Temperature effect on zero balance	0.05% of R.O./10℃
Temperature range, compen	-10~50℃
Temperature range, safe	-10~50℃
Excitation recommended	10V
Safe overload	150% R.C.
Cable length	Ø3 4core cable, 4m

>Model CB122

Miniature single point load cell
high accuracy and low price
Small capacity

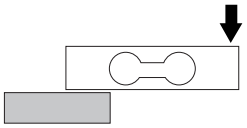

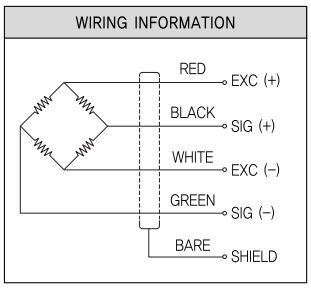

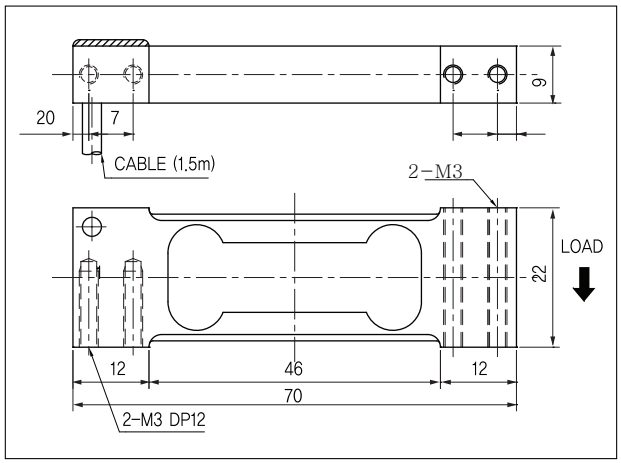

>SPECIFICATIONS

Specifications	Accuracy
Rated capacity(R.C)	200gf, 300gf
Rated output(R.O)	1.2mV/V±10%
Nonlinearity	0.02% of R.O.
Hysteresis	0.02% of R.O.
Repeatability	0.02% of R.O.
Zero balance	±5% of R.O.
Terminal resistance, input	420±20Ω
Terminal resistance, output	350±2Ω
Insulation resistance bridge	2000MΩ
Temperature effect on rated output	0.02% of LOAD/10℃
Temperature effect on zero balance	0.03% of R.O./10℃
Temperature range, compen	0~40℃
Temperature range, safe	-10~50℃
Excitation recommended	10V
Safe overload	150% R.C.
Cable length	Ø3 4core cable, 1.5m

★Specifications are subject to change without notice.